BODY, ROOF - Z26NMY99A4/B4/A6/B6 (C750892)

2026 RZR - RZR XP S 4 1000 ULTIMATE (R01) - Z26NMY99A4/B4/A6/B6

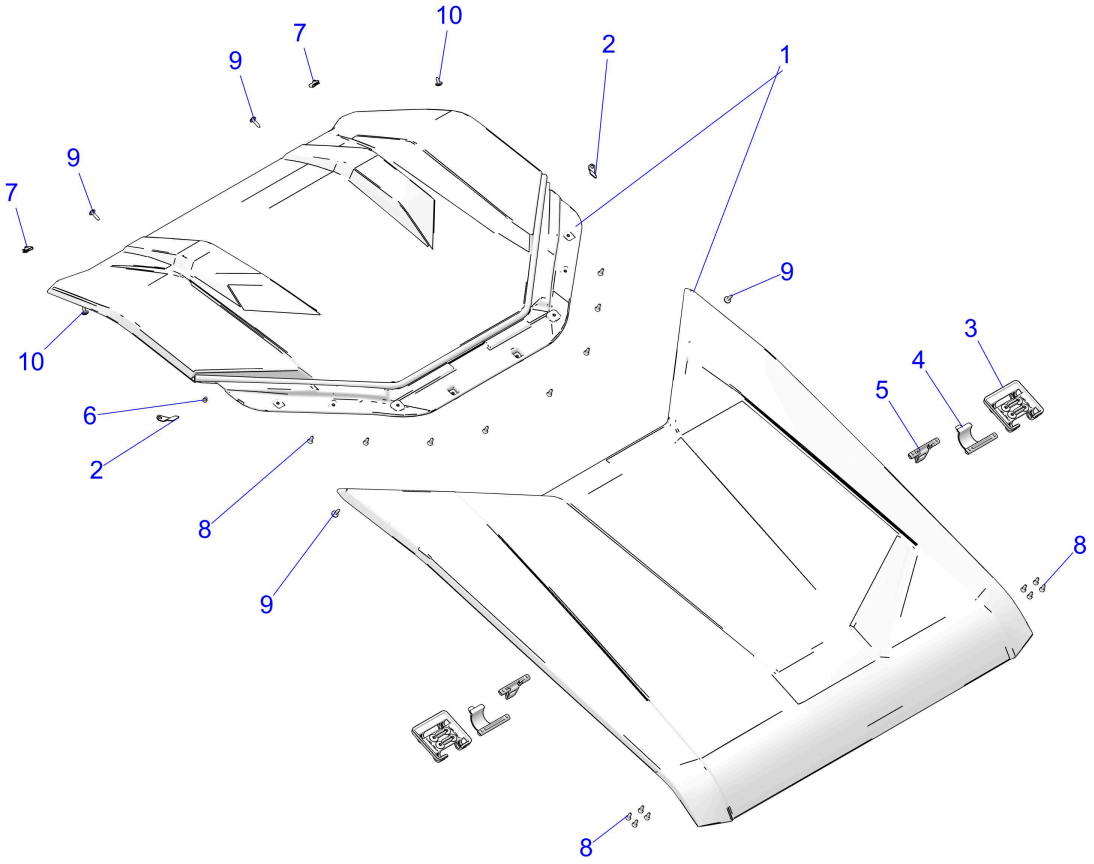

© 2025 Polaris Industries Inc.

C750892

Reference #	*Part#*	*Description*	*Quantity*
1	2884554	K-ROOF,POLY,MP,RZR	1
1	2208302	HDWR-ROOF,POLY,MP,RZR [INCL. 2-10]	1
2	5272325-329	BRKT-CORNER,ROOF,BLK	2
3	5455622	CLAMP-BASE,ROOF,RZV	2
4	5455623	CLAMP-HOOP,ROOF,RZV	2
5	5455624	CLAMP-LATCH,ROOF,RZV	2
6	7527972	SCR-TXPH-#14 X 1/2 HI/LO ZTB	2
7	7081305	CLIP-U SPEED NUT	2
8	7519045	SCR-TX TRUSS-#14X3/4, HI/LO ZBK	16
9	7519650	SCR-TXTH-M6X1.0X25 ZFB	4

10	7518936	SCR-M6X1X16 TR/TX-M	2

Copyright 1996-2026 Polaris Industries U.S.A All rights reserved.